KOHLER®

Roughing-In

K-12230, K-12231
FAIRFAX®
KITCHEN SINK HIGHSPOUT FAUCET

Product Information

Applicable product:	
Kitchen sink faucet	K-12230
Kitchen sink faucet with handspray	K-12231
Lever handle is ADA compliant.	**ADA**

Installation Notes

Install this faucet following the installation instructions provided.
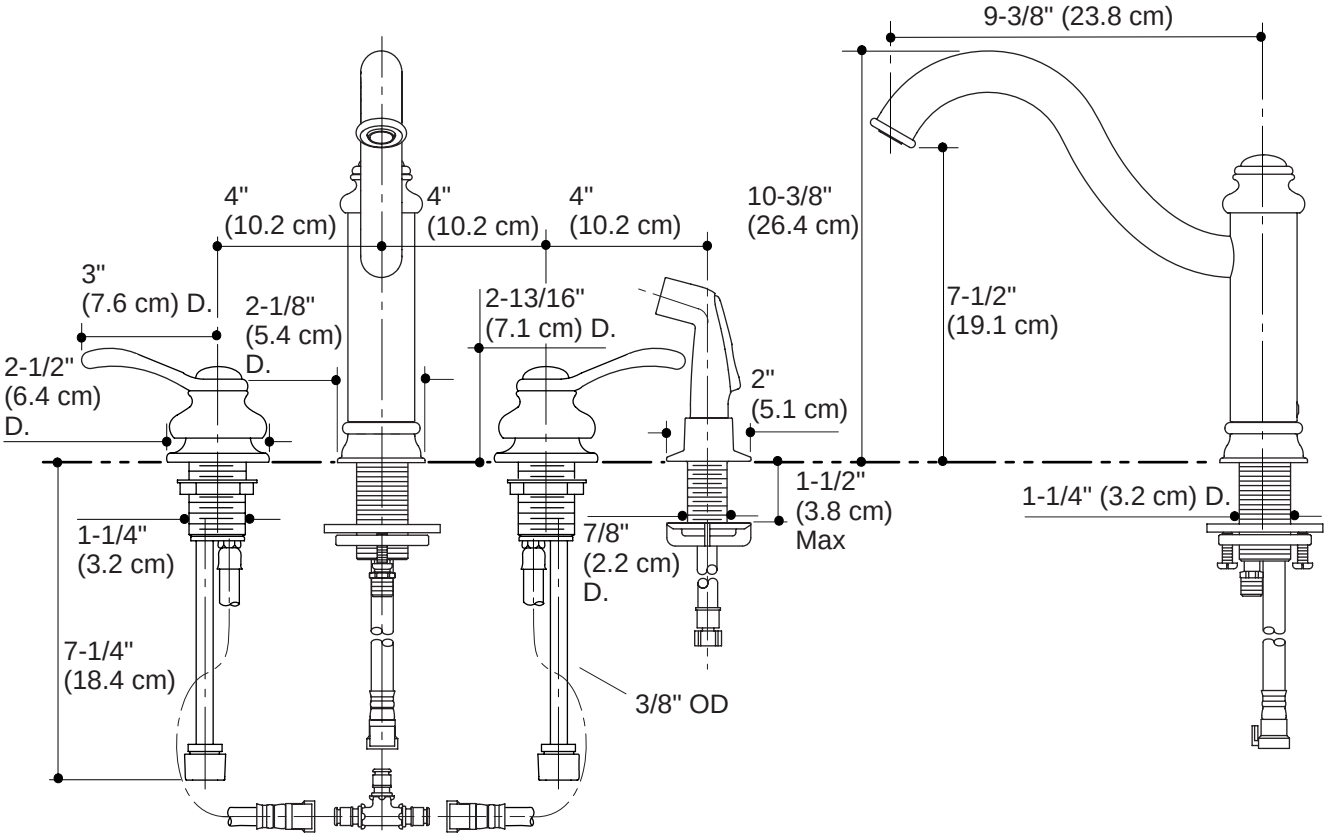
Lower flow aerator options are available - please refer to the Kohler price book.