KOHLER®
Roughing-In

K-6584
IRON/TONES™
ENAMELED CAST IRON SINK

Ordering Information

Mexico faucets and fittings have an **M** after the first sequence of numbers (such as K-12345**M**)		
Accessories/hardware:		
Hardwood cutting board	K-3294	optional
Wire rinse basket	K-3277	optional
Bottom basin rack	K-3190	optional
Duostrainer sink strainer	K-8801	optional

Product Information

Fixture*:		basin area	water depth
Sink		14” (35.6cm) x 16” (40.6cm)	7-1/2” (19.1cm)
Outlet	3-7/8” D. (9.8cm)		
* Approximate measurements for comparison only.			

Included Components:	
Basin clamp accessory pack	52047
Cutout template	114332-7

Installation Notes

Refer to installation instructions included with fixture before beginning installation.

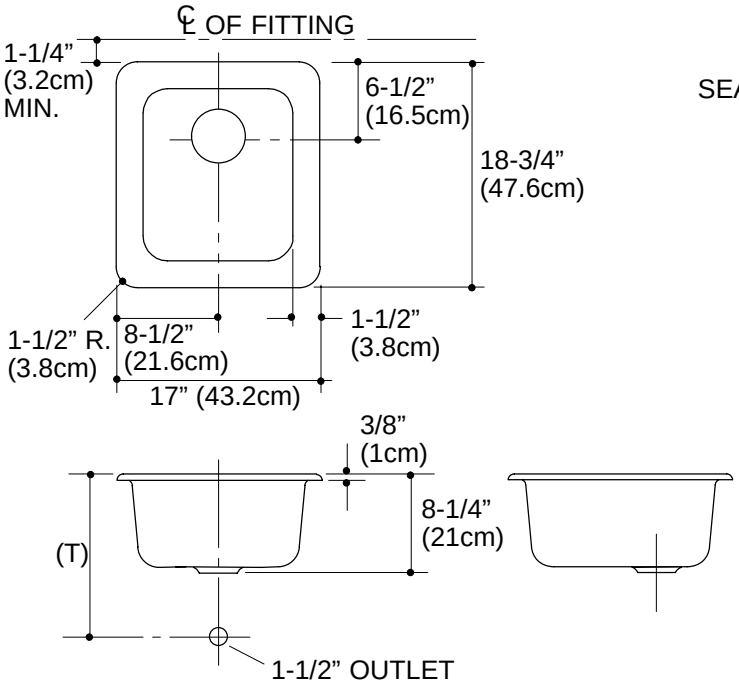

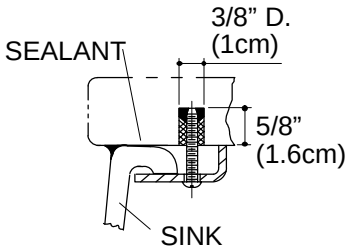

SOLID SURFACE INSTALLATION

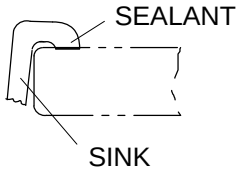

SELF-RIMMING INSTALLATION

Roughing-In Notes
Fixture dimensions are nominal and conform to tolerances in ASME/ANSI Standard A112.19.1M.
(T) Drain typically 13-1/2” (34.3cm).
Supplied basin clamp assemblies require 1” (2.5cm) minimum countertop thickness. Installer must supply hardware for thinner countertops.
For multiple bowl undercounter installations, a minimum distance of 3-3/8” (8.6cm) is required between bowls. Countertop supplier to determine required support.